Alpine Heater Information

Statistic	Stirling Free Standing	Kosciuszko	Stirling Inert	
			Box	Fascia
Width	690	770	605	895
Height	760	820	585	695
Depth	500	550	370	
Rear Clearance	150	150	N/A	
Side Clearance	375	350	N/A	
Corner Clearance	125	125	N/A	
Heat Output High	10KW	13.8KW	10KW	
Average Efficiency	68%	63%	68%	
Emissions \ Kg	3.7 Gm	1.3 Gm	3.7 Gm	
Paint	Metallic Black	Metallic Black	Metallic Black	

Alpine has been making wood heaters for over 20 years.
We recommend that you burn dry well seasoned hardwood only and have your heater serviced every year!

Your Authorised Dealer:

Alpine Woodheating Pty Ltd
Factory 7/29 Barry St Bayswater Vic 3153
Tel: 03 9720 3444 Fax: 03 9720 7882
www.alpineheating.com.au

The Alpine range of heaters are manufactured in Australia and tested to comply with Australian Standard AS/NZS 4013:1999 and AS/NZS 4012: 1999.

Alpine WOOD HEATING

WOOD HEATERS

Australian Made since 1989

Imperial Carousel

Stirling Insert

Kosciuszko

Slow combustion free standing & Insert Heaters

Choose between the Stirling or larger Kosciuszko and Stirling Insert. Fan forced heaters, all of which offer outstanding value for money and years of reliable service.

Some of the benefits of buying an Alpine Wood Heater are:

- Finger tip damper control
- Large loading door with 5mm thick ceramic glass
- Self cleaning door glass (under normal conditions)
- Heavy gauge folded and seam welded firebox
- Refractory lined firebox
- Removable steel baffle
- Deep ash bed requiring cleaning less often
- Clearance tested to AS/NZS 4013:1999 and AS/NZS 4012:1999
- Quiet 3 speed fan
- Overnight burning capability
- Brick Retainer

Heater	Capacity	Height	Width	Depth
Kosciuszko	Up to 25 Squares	820	770	550
Stirling	Up to 20 Squares	760	690	500
Stirling Insert	12 Squares	refer to detail		

Minimum clearance required to combustible

Heater	A	B	C	D	E	Hearth Thickness
Kosciuszko	150	375	125	375	120	6
Stirling	150	400	125	400	120	6

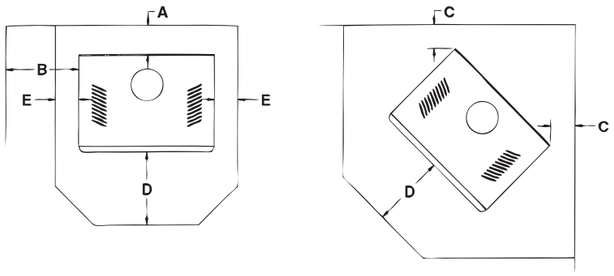

Heater Price	$
Flue Price	$
Extras	$
Installation	$
TOTAL PRICE	$

Stirling

Stirling Insert

Stirling Insert Specifications

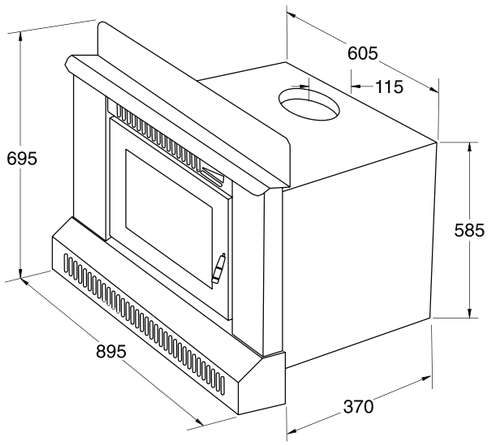

Carousel free standing heaters

Experience the remarkable visual effect offered by Alpine Carousel Heaters. Enjoy the rich radiant heat that will warm to the toes.

Stock colours in vitreous enamel are Burgundy & Black, with the choice of stainless steel or brass trim. (Other colours are available upon request.)

The outstanding features of the Imperial and the Summit are illustrated (right). Together with specifications for this truly unique heater.

Heater	Capacity	Height	Width
Imperial Carousel	15 - 17 Squares	1070	1050
Summit Carousel	12 - 15 Squares	865	800

Clearances for your carousel heater

Distance around carousel from combustible materials:

Heater	Distance from combustible materials
Imperial Carousel	1200mm
Summit Carousel	700mm

Hearth 8mm fibre cement board and ceramic tiles:
300mm wider than unit

Exposed flue reaches ceiling height:
2.6 metres (8'6")

Heater Price	$
Flue Price	$
Extras	$
Installation	$
TOTAL PRICE	$

Imperial

Summit
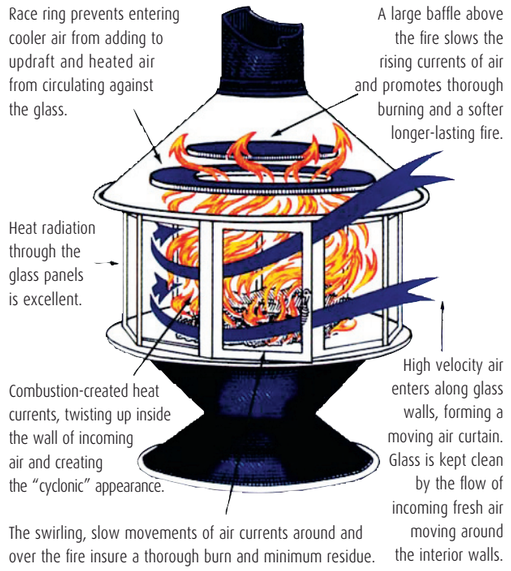
How the carousel works